Weller®

Zero Smog 4V

Betriebsanleitung - Mode d'emploi - Gebruiksaanwijzing - Istruzioni per l'uso - Operating Instructions - Instruktionsbok - Manual de uso - Betjeningsvejledning - Manual do utilizador - Käyttöohjeet - Οδηγίες Λειτουργίας - Kullanım kılavuzu - Návod k použití - Instrukcja obsługi - Üzemeltetési utasítás - Návod na používanie - Navodila za uporabo - Kasutusjuhend - Naudojimo instrukcija - Lietošanas instrukcija

D

Inhaltsverzeichnis — Seite

1. Achtung! 1
2. Beschreibung 1
3. Inbetriebnahme 2
4. Montage 3
5. Störungsabhilfe 3
6. Wartung 4
7. Ersatzteile 4
8. Zubehör 4
9. Lieferumfang 4
10. Garantie 4

F

Sommaire — Page

1. Attention! 5
2. Description 5
3. Mise en service 6
4. Montage 7
5. Remèdes aux dérangements 7
6. Entretien, consigne de travail 8
7. Pièces de rechange 8
8. Accessoires 8
9. Ensemble de la livraison 8
10. Garantie 8

NL

Inhoudsopgave — Pagina

1. Attentie! 9
2. Beschrijving 9
3. Ingebruikneming 10
4. Montage 11
5. Opheffing van storingen 11
6. Onderhoud, advies 12
7. Onderdelen 12
8. Toebehoor 12
9. Omvang van de levering 12
10. Garantie 12

I

Sommario — Pagina

1. Attenzione! 13
2. Descrizione 13
3. Indicazioni operative 14
4. Montaggio 15
5. Eliminazione di guasti 15
6. Manutenzione, note sul lavoro 16
7. Parti di ricambio 16
8. Accessori 16
9. Volume di fornitura 16
10. Garanzia 16

GB

Contents — Page

1. Caution! 17
2. Description 17
3. Commissioning 18
4. Installation 19
5. Breakdown assistance 19
6. Maintenance and information 20
7. Replacement parts 20
8. Accessories 20
9. Scope of shipment 20
10. Warranty 20

S

Innnehållsförteckning — Sida

1. Observera! 21
2. Beskrivning 21
3. Idrifttagning 21
4. Montering 23
5. Felsökning 23
6. Underhåll, arbetsbeskrivning 24
7. Reservdelar 24
8. Tillbehör 24
9. I leveransen ingår 24
10. Garantie 24

E

Índice — Página

1. Atención! 25
2. Descripción 25
3. Puesta en funcionamiento 26
4. Montaje 27
5. Eliminación de fallos 27
6. Mantenimiento, indicación para el trabajo 28
7. Repuestos 28
8. Accesorios 28
9. Volumen de suministro 28
10. Garantía 28

DK

Indholdsfortegnelse — Side

1. Forsigtig! 29
2. Beskrivelse 29
3. Igangsætning 30
4. Montage 31
5. Fejlafhjælpning 31
6. Vedligehold, Arbejdsanvisning 31
7. Reservedele 31
8. Tilbehør 31
9. Leveringsomfang 31
10. Garanti 31

P

Índice — Página

1. Atenção! 33
2. Descrição 33
3. Colocação em funcionamento 34
4. Montagem 35
5. Solução de falhas 36
6. Manutenção, nota sobre o trabalho 36
7. Peças sobressalentes 36
8. Acessórios 36
9. Âmbito do fornecimento 36
10. Garantia 36

FIN

Sisällysluettelo — sivu

1. Huomio! 37
2. Tuoteseloste 37
3. Käyttöönotto 38
4. Asennus 39
5. Häiriön poisto 39
6. Huolto, toimintaohje 40
7. Varaosat 40
8. Varusteet 40
9. Toimituksen laajuus 40
10. Takku 40

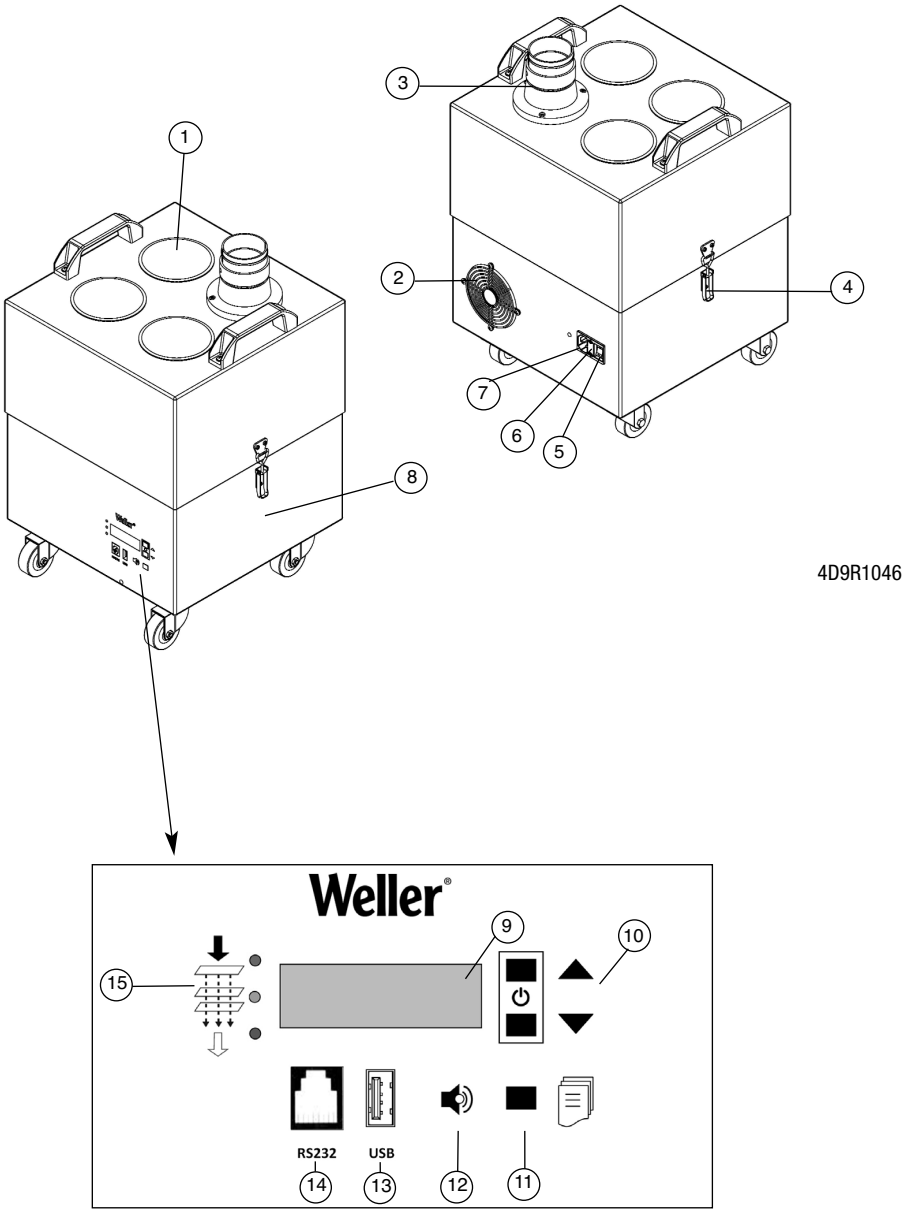
1
2
3
4
5
6
7
8
4D9R1046
Weller
9
10
11
12
13
14
15
RS232
USB

D

1. Filtergehäuse
2. Öffnung für Abluft
3. Schlauchanschluß
4. Spannschlösser
5. Netzschalter
6. Sicherung
7. Netzanschluß
8. Turbinengehäuse
9. LCD Display

Displayansicht

10. UP/DOWN Tasten
11. Menütaste
12. Akustisches Signal
13. USB-Schnittstelle
14. RS232-Schnittstelle
15. Rot/Gelb/Grün Filteranzeige

F

1. Boîtier du filtre
2. Ouverture pour évacuation de l'air
3. Raccord pour tuyau
4. Tendeur
5. Interrupteur secteur
6. Fusible
7. Prise secteur
8. Boîtier de la turbine
9. Affichage LCD

Vue

10. Touches UP/DOWN
11. Touche menu
12. Signal sonore
13. Interface USB
14. Interface RS232
15. Affichage de l'état du filtre rouge/jaune/vert

NL

1. Filtrhuis
2. Opening voor afvoerlucht 0
3. Slangaansluiting
4. Spansloten
5. Netspanningschakelaar
6. Zekering
7. Netaansluiting
8. Turbinebehuizing
9. LCD-display

Displayaanzicht

10. UP/DOWN-toetsen
11. Menutoets
12. Akoestisch signaal
13. USB-interface
14. RS232-interface
15. Rood/geel/groen-filterindicatie

I

1. Scatola del filtro
2. Apertura per aria di scarico
3. Raccordo per tubi
4. Tenditore
5. Interruttore di alimentazione
6. Fusibile
7. Collegamento di rete
8. Alloggiamento della turbina
9. Display LCD

Schermata del display

10. Tasti UP/DOWN
11. Tasto del menu
12. Segnale acustico
13. Interfaccia USB
14. Interfaccia RS232
15. Indicatore del filtro rosso/giallo/verde

GB

1. Filter housing
2. Exhaust air outlet
3. Hose connection
4. Clamping locks
5. Power switch
6. Fuse
7. Power supply
8. Turbine housing
9. LCD display

Display view

10. UP/DOWN keys
11. Menu key
12. Audible signal
13. USB port
14. RS232 port
15. Red/yellow/green filter display

S

1. Filterkammare
2. Öppning för frånluft
3. Slangkoppling
4. Spännlås
5. Huvudströmbrytare
6. Säkring
7. Nätanslutning
8. Turbinhus
9. LCD-display

Displayvy

10. Uppåt-/nedåtknappar
11. Menyknapp
12. Akustisk signal
13. USB-gränssnitt
14. RS232-gränssnitt
15. Röd/gul/grön filterdisplay

E

1. Caja del filtro
2. Abertura para la salida de aire
3. Toma para manguera
4. Cierre
5. Interruptor de red
6. Fusible
7. Toma de red
8. Caja de la turbina
9. Pantalla LCD

Vista de la pantalla

10. Teclas subir/bajar (UP/DOWN)
11. Tecla de menú
12. Señal acústica
13. Puerto USB
14. Puerto RS232
15. Indicador del filtro Rojo/Amarillo/Verde

DK

1. Filterhus
2. Åbning til afgangsluft
3. Slangestuds
4. Spændelåse
5. Netafbryder
6. Sikring
7. Netforbindelse
8. Turbinehus
9. LCD-display

Displayvisning

10. OP/NED-taster
11. Menutast
12. Akustisk signal
13. USB-port
14. RS232-port
15. Rød/gul/grøn-filtervisning

P

1. Invólucro do filtro
2. Abertura para ar de exaustão
3. Ligação de mangueira
4. Fechos de mola
5. Interruptor principal
6. Fusível
7. Ligação de rede
8. Invólucro da turbina
9. Visor LCD

Vista do visor

10. Teclas UP/DOWN
11. Tecla de menu
12. Sinal acústico
13. Interface USB
14. Interface RS232
15. Indicação de filtro vermelha/amarela/verde

Thank you for placing your trust in our company by purchasing the Weller Zero Smog 4V volume fume extraction unit. Production was based on stringent quality requirements which guarantee the perfect operation of the device.

1. Caution!

Please read these Operating Instructions and the attached safety information carefully prior to initial operation. Failure to observe the safety regulations results in a risk to life and limb.

The manufacturer shall not be liable for damage resulting from misuse of the machine or unauthorised alterations.

1.1 Applied directives

The Weller Zero Smog 4V volume fume extraction system extraction unit corresponds to the EC Declaration of Conformity in accordance with the basic safety requirements of Directives 2004/108/EC and 2006/95/EC.

1.2 Valid documents

- Operating Instructions of the Zero Smog 4V solder fume extraction unit
- Accompanying safety instruction booklet

2. Description

The WELLER Zero Smog 4V solder fume extraction unit is equipped with a high-performance, maintenance-free turbine and, therefore, is ideally suited to industrial continuous duty. Digital electronics make for easy and convenient system operation. The unit is designed for use as a **surface extraction unit** and is not suitable for extracting fumes directly from the soldering gun. Turbine speed, i.e. delivery rate, is continuously variable up to max. 230 m³/h. Up to 4 hose connections are available for connecting the pipe system. This means that the pipe system can be customized for individual requirements. The installed 3-stage filter (fine dust filter, suspended matter filter and broadband gas filter) is configured as standard for the extraction of solder fumes. Thanks to the use of class E 12 (formerly H13) type-approved suspended matter filters, the as-delivered filter set achieves a separation efficiency of 99.95 % according to EN 1822, based on a particle size of 0.12 µm. These figures can only be achieved by using OEM parts.

The WELLER Zero Smog 4V solder fume extraction unit can be connected using a flexible suction hose or connected directly to the vacuum tube system (60 mm). For this purpose, the corresponding screw cap must be removed from the filter housing (1). Fit the 60 mm hose connection (3) to the filter housing (2) using 3 fastening screws. A maximum of 4 hose connections can be fitted. Unused vacuum connections must be sealed. A wide range of accessories from the Easy Klick 60 line are available for installation of the extractor-arms. (Refer to Weller catalogue, www.weller-tools.com, Configurator).

Filter display (15)

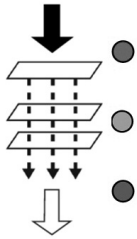

The degree of clogging of the filter is determined by differential pressure measurement. The filter display (**15**) indicates the current filter status

Red = filter full
Yellow = filter status > 80%
Green = filter status < 80%.

When the filter is used up, an **audible signal** sounds
once an hour
every half hour after 36 hours
every 10 min after 54 hours
continuously after 72 hours.

The suspended matter filter and the broadband gas filter are complementary to one another and can be replaced together as a compact filter. The fine dust filter (16) (filter mat) is the preliminary stage of the compact filter (17) and therefore must be replaced more frequently. It is sufficient to replace the prefilter mat if the red LED (15) does not come on after restarting the unit.

RS232 port

All system functions can be operated and remotely monitored via the RS232 port (**14**).

USB port

The USB port (**13**) can be used to load firmware updates, run efficiency tests and log data.

Do not leave the USB medium inserted for longer than 2 minutes. After this time expires, the USB module will switch off automatically.

Technical data		
Dimensions L x W x H:		320 mm x 320 mm x 395 mm
Weight:		19 Kg
Voltage:		230 V/50 Hz (120 V/60 Hz)
Electrical power rating:		275 VA
Maximum vacuum:		2,700 Pa
Maximum quantity supplied:		230 m³/h
Pre filter:	Stage 1	pre filter mat class F7
Combined filter:	Stage 2; 3	Combined E12 high efficiency submicron filter (99.95 % particle separation upto 0.12 µm) and wide band gas filter (50 % activated carbon, 50 % Puratex)

3. Commissioning

3.1 Electrical connection

The supply voltage must be checked against the machine name plate details prior to switch on. If correct then connect the Zero Smog 4V to the mains and switch on at the machine main switch (5).

3.2 Menu navigation

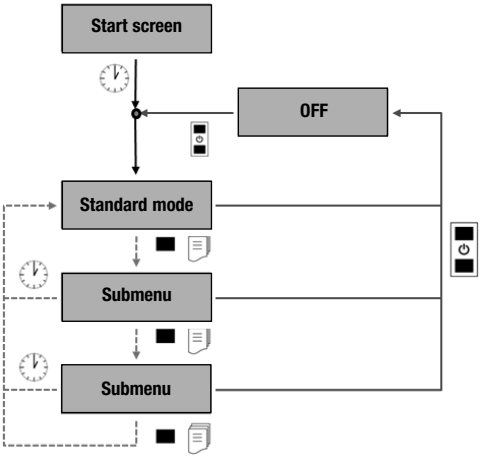

Display after power-on
BL = bootloader version
FW = firmware version

ZERO SMOG 4V VER BL.FW

Default operating mode
The speed (30-100%) can be entered using the UP/DOWN keys.

SPEED MANUAL	> 100%

3.3 Submenu functions

To select a menu item, press the Menu key. Each time the Menu key is pressed, the next menu item is selected. The display automatically returns to the default operating mode after five seconds.

3.3.1 Filter time display

Displays filter time (filter operating hours) elapsed since last "Reset".

FILTER TIME CURRENT	0 HOURS

3.3.2 Specified filter time

Specifies the fixed nominal filter life/nominal filter operating hours
Adjustable from one hour to 999 days
Default setting as-delivered 200 days
After this time expires, the unit switches to "red" and an audible signal also sounds

FILTER TIME DEFAULT	OFF

3.3.3 Reset filter time

Resets the elapsed filter operating hours to zero

FILTER TIME RESET	NO

3.3.4 Pressure control / automatic speed control

When the extractor arm is open, the required suction capacity / flow rate is set manually in the default operating mode by adjusting the turbine speed. If the pressure control function is activated, the turbine speed is adjusted automatically as soon as further extractor arms are opened. This allows a constant flow rate to be maintained under changing numbers of open extractor arms.

PRESSURE CONTROL	ON

SPEED AUTOMATIC	> 100 %

3.3.5 Automatic OFF

If this function is activated, the unit switches automatically to OFF mode on expiration of the set time (the turbine and backlit display are turned off)
Adjustable from one hour to 7 days

OFF AUTOMATIC	10 HOURS

3.3.6 Selecting menu navigation language

Select from the following user languages: D, F, E, I, GB

SELECT LANGUAGE	GB

3.3.7 Unit number

An internal unit number is assigned to each unit.

UNIT NUMBER
XXXXXXXX

3.3.8 OFF mode
The turbine and the backlit display are off.To activate/deactivate, press the UP/DOWN keys simultaneously.

OFF MODE

4. Installation

Ensure that the exhaust air (1) from the Zero Smog 4V is not obstructed.

Before adjusting the position of the nozzle, move the tube into the upright position and push the plate fins together. This prevents the tube from twisting.

Decommissioning
Attention!
A high concentration of pollutants will result in the active carbon heating up. The equipment should be run for several minutes in a pollutant freestate before being switched off in order to prevent unwanted heating up.

5. Breakdown assistance

Malfunction	Cause	Solution
Extraction power missing	Pipe system leaking Filter is dirty Turbine speed too low	Reseal the pipe system Change the filter Increase the speed setting
Loud extraction noises	Air speed through extractionarm is too high speed	Reduce the air speed (reduced air quantity)
Zero Smog 4V is not running	Thermally switched off	Leave the Zero Smog 4V to cool down Switch on again afterapprox. 3 hours
Filter display is not working	Minimum pressure hose was not replaced after the filter change	Reconnect the hose to the filter
Sub-micron particle becoming dirty to quickly	Pre-filter has not been used	Use a pre-filter Fit an F7 filter Use a preliminary separator if the proportion of solid matter is high.
Unable to detect USB medium	USB medium inserted too long	Do not leave USB medium inserted for longer than 2 minutes. Remove USB medium and switch unit off and on again
Reset unit	Wrong USB medium > 100 mA	Remove USB medium!

6. Maintenance and information

Different fluxes and flux constituents and the amount of and size of dust particles in the extracted air will signifi cantly effect the filters working life.
Submicron particles in the extracted air increase when soldering or welding to varnish insulated wire.

Filter change

The mains plug must always be pulled out of the mains socket before any maintenance work is undertaken. To change the filter you must first open the locking clamps (4) between the turbine housing (8) and the filter housing (1) and then lift off the filter housing. Pull the vacuum hose off of the compact filter. The compact filter (17) and the fine dust filter (18) can be removed using the carrying straps. The fine dust filter is laid inside the compact filter (see exploded drawing).

Attention!

The minimum pressure hose must be reconnected correctly and the holding latches must be turned downwards when replacing the filter.

Contaminated filters must be treated as special waste. Dispose of replaced equipment parts, filters or old devices in accordance with the rules and regulations applicable in your country.

7. Replacement parts

See Exploded page 81 for replacement parts for standard installations

T005 87 359 37	Fine dust filter M5
T005 87 359 38	Fine dust filter F7 (Scope of shipment)
T005 87 359 36	Compact filter for adhesive vapours, comprising wide band gas filter (50 % activated carbon, 50 % Puratex) (Scope of shipment)
T005 87 358 95	Wide band gas filter without sub micro filter

Diagram Illustration page 81
Exploded Illustration page 83

8. Accessories

T0058735862 Preliminary separator
T0058735909 Remote control
T0058762724 Remote control adapter
T0053119199 Remote control connecting cable (2 m)
Easy Click 60

9. Scope of shipment

Zero Smog 4V incl. filter
Connecting cable
Operating manual
Safety information

10. Warranty

Claims by the buyer for physical defects are time-barred after a period of one year from delivery to the buyer. This does not apply to claims by the buyer for indemnification in accordance with §§ 478, 479 BGB (German Federal Law Gazette). We shall only be liable for claims arising from a warranty furnished by us if the quality or durability warranty has been furnished by use in writing and using the term "Warranty“.
In addition, for the USA and Canada:
Weller Tools GmbH warrants to the original purchaser and any subsequent owner (“Buyer”) that Weller soldering and desoldering products will be free from defects in material and workmanship for a period of one year from date of purchase, provided that no warranty is made with respect to products which have been altered, subjected to abuse or improperly used, installed or repaired. Use of non-Weller Tools components will void this warranty if a non-Weller Tools GmbH component is defective (or is the source of the defect). Weller Tools GmbH will repair or replace products found to be defective not caused by a part, component or accessory manufactured by another company, during the warranty period. Contact Weller Tools GmbH with dated proof of purchase and return to Apex Tool Group, LLC., 14600 York Rd. Suit A, Sparks, MD 21152. All costs of transportation and reinstallation shall be borne by the Buyer. IN NO EVENT SHALL WELLER TOOLS GMBH BE LIABLE FOR INCIDENTAL OR CONSEQUENTIAL DAMAGES. WELLER TOOLS GMBH LIABILITY FOR ANY CLAIMS ARISING OUT OF THIS WARRANTY SHALL NOT EXCEED THE PURCHASE PRICE OF THE PRODUCT. THE PERIOD OF ALL IMPLIED WARRANTIES APPLICABLE TO THIS PRODUCT INCLUDING ANY IMPLIED WARRANTY OF MERCHANTABILITY OR FITNESS, OR FITNESS FOR A PARTICULAR PURPOSE IS LIMITED TO 12 MONTHS FROM THE DATE OF PURCHASE BY THE USER.
Some states do not allow the exclusion or limitation of incidental or consequential damages, so the above limitation or exclusion may not apply to you. Some states do not allow limitation on how long an implied warranty lasts, so the above limitation may not apply to you.
This warranty gives you specific legal rights, and you may also have other rights, which vary from state to state.

Subject to technical alterations and amendments!

See the updated operating instructions at www.weller-tools.com.

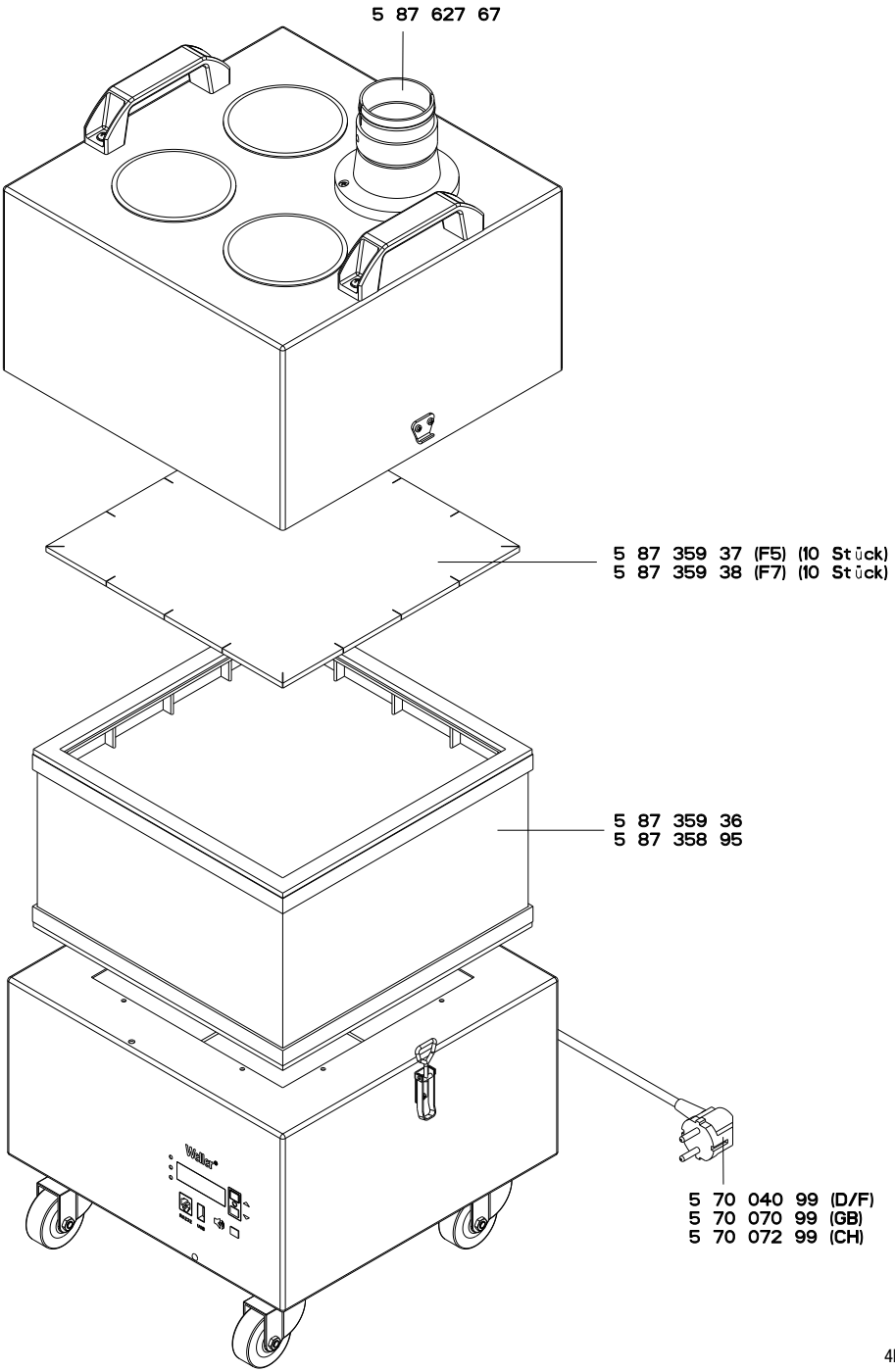
5 87 627 67
5 87 359 37 (F5) (10 Stück)
5 87 359 38 (F7) (10 Stück)
5 87 359 36
5 87 358 95
5 70 040 99 (D/F)
5 70 070 99 (GB)
5 70 072 99 (CH)
Weller

4D9R1051

Additional extraction arm kits
Set with 1 extraction arm for upgrading workplaces for Zero Smog 4V:

T005 36 572 99 Kit 1WF Sloped 60 for volume extraction
consists of:
T005 36 578 99 Extraction arm
T005 36 577 99 Sloped nozzle
T005 36 574 99 Stop valve
T005 36 575 99 Bench mounting bracket
T005 36 576 99 Extraction hose (3 m)

T005 36 571 99 Kit 1WF Funnel 60 for volume extraction
consists of:
T005 36 578 99 Extraction arm
T005 36 573 99 Funnel nozzle
T005 36 574 99 Stop value
T005 36 575 99 Bench mounting bracket
T005 36 576 99 Extraction hose (3 m)

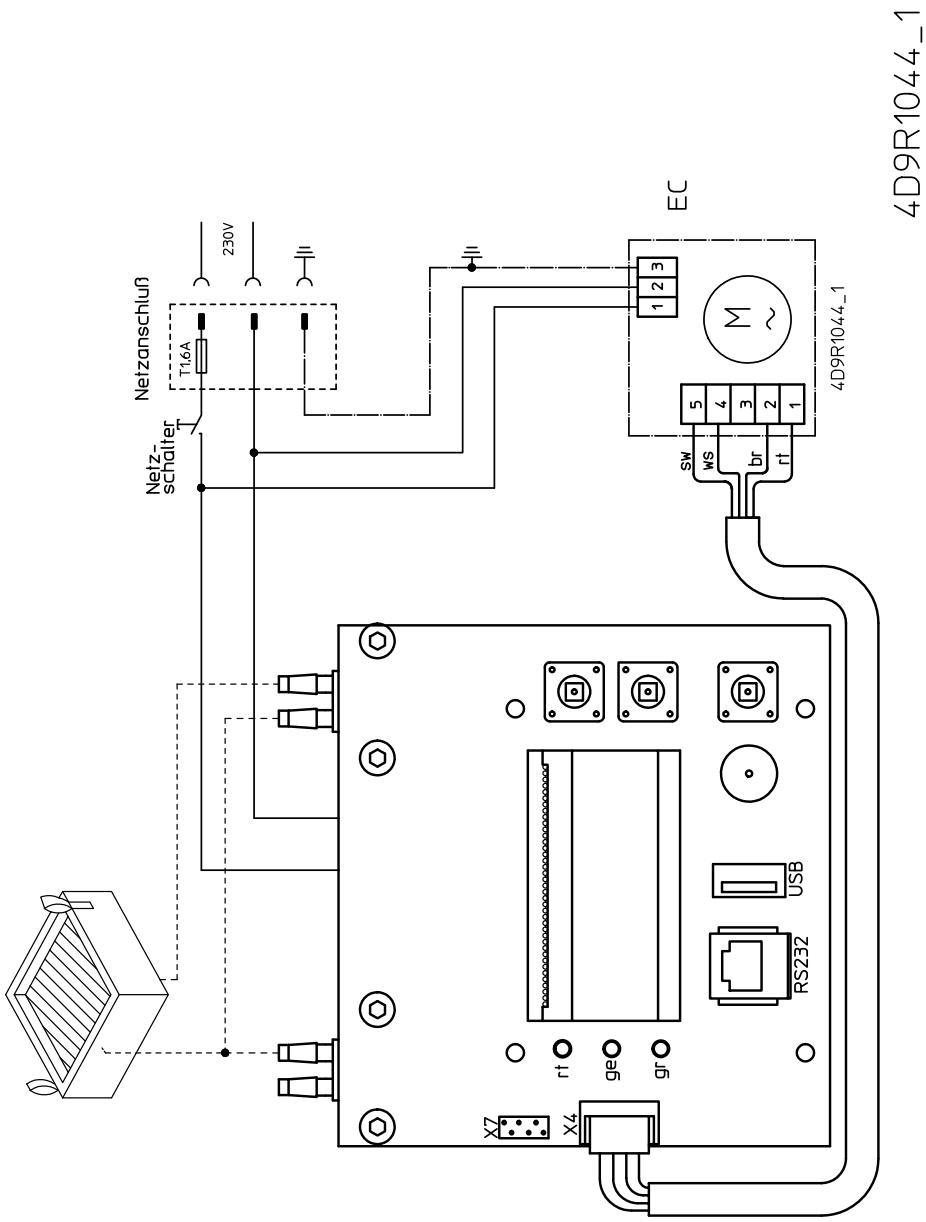
4D9R1044_1
EC
Netzanschluß
T1,6A
230V
Netz-
schalter
1 2 3
5 4 3 2 1
sw
ws
br
rt
4D9R1044_1
USB
RS232
rt
ge
gr
X7
X4

GERMANY
Weller Tools GmbH
Carl-Benz-Str. 2
74354 Besigheim
Phone: +49 (0) 7143 580-0
Fax: +49 (0) 7143 580-108

GREAT BRITAIN
Apex Tool Group
(UK Operations) Ltd
4th Floor Pennine House
Washington, Tyne & Wear
NE37 1LY
Phone: +44 (0) 191 419 7700
Fax: +44 (0) 191 417 9421

FRANCE
Apex Tool Group S.A.S.
25 Av. Maurice Chevalier B.P. 46
77832 Ozoir-la-Ferrière, Cedex
Phone:+33 (0) 160.18.55.40
Fax: +33 (0) 164.40.33.05

ITALY
Apex Tool S.r.l.
Viale Europa 80
20090 Cusago (MI)
Phone: +39 (02) 9033101
Fax: +39 (02) 90394231

SWITZERLAND
Apex Tool Switzerland Sàrl
Rue de la Roselière 8
1400 Yverdon-les-Bains
Phone: +41 (0) 24 426 12 06
Fax: +41 (0) 24 425 09 77

AUSTRALIA
Apex Tools
P.O. Box 366
519 Nurigong Street
Albury, N. S. W. 2640
Phone: +61 (2) 6058-0300

CANADA
Apex Tools - Canada
164 Innnisfil street
Barrie Ontario
Canada L4N 3E7
Phone: +1 (905) 455 5200

CHINA
Apex Tool Group
A-8 building, No. 38 Dongsheng Road
Heqing Industrial Park, Pudong
Shanghai PRC 201201
Phone: +86 (21) 60880288

U S A
Apex Tool Group, LLC
14600 York Rd. Suite A
Sparks, MD 21152
Phone: +1 (800) 688-8949
Fax: +1 (800) 234-0472

T005 57 261 01 / 08.2012
T005 57 261 00 / 03.2012

www.weller-tools.com

Weller®

Weller® is a registered Trademark and registered Design of Apex Tool Group, LLC
© 2012, Apex Tool Group, LLC